# Hoffman Amplifiers

Back to Library page

Tube pedal project

Page 1 - Page 2 - Page 3 - Page 4

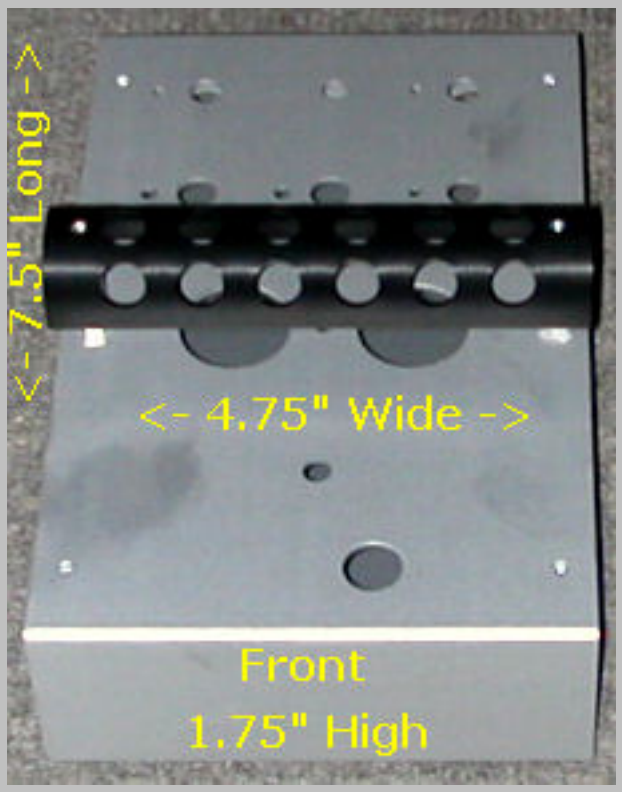


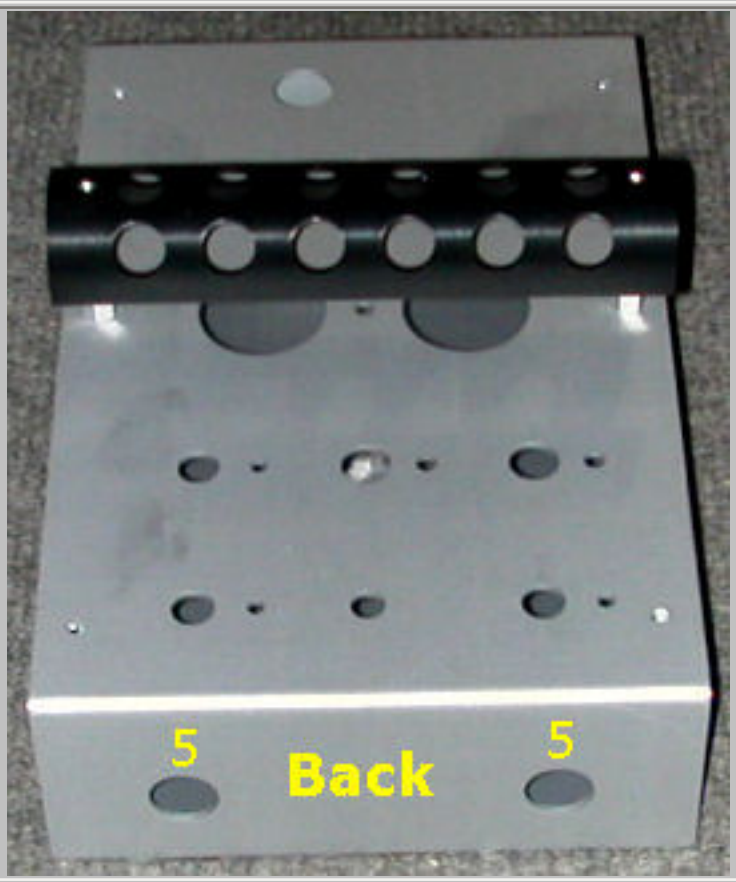


This box is all aluminum construction and it looks to be 1/16" inch thick. It has a black tube guard that stands up on 1 1/4" hex standoffs. The black tube guard mounts to the standoffs with two #6 screws. There is also an internal hex standoff that supports the center section between the two tube holes. It comes with a package of chassis screws and rubber stick on feet.

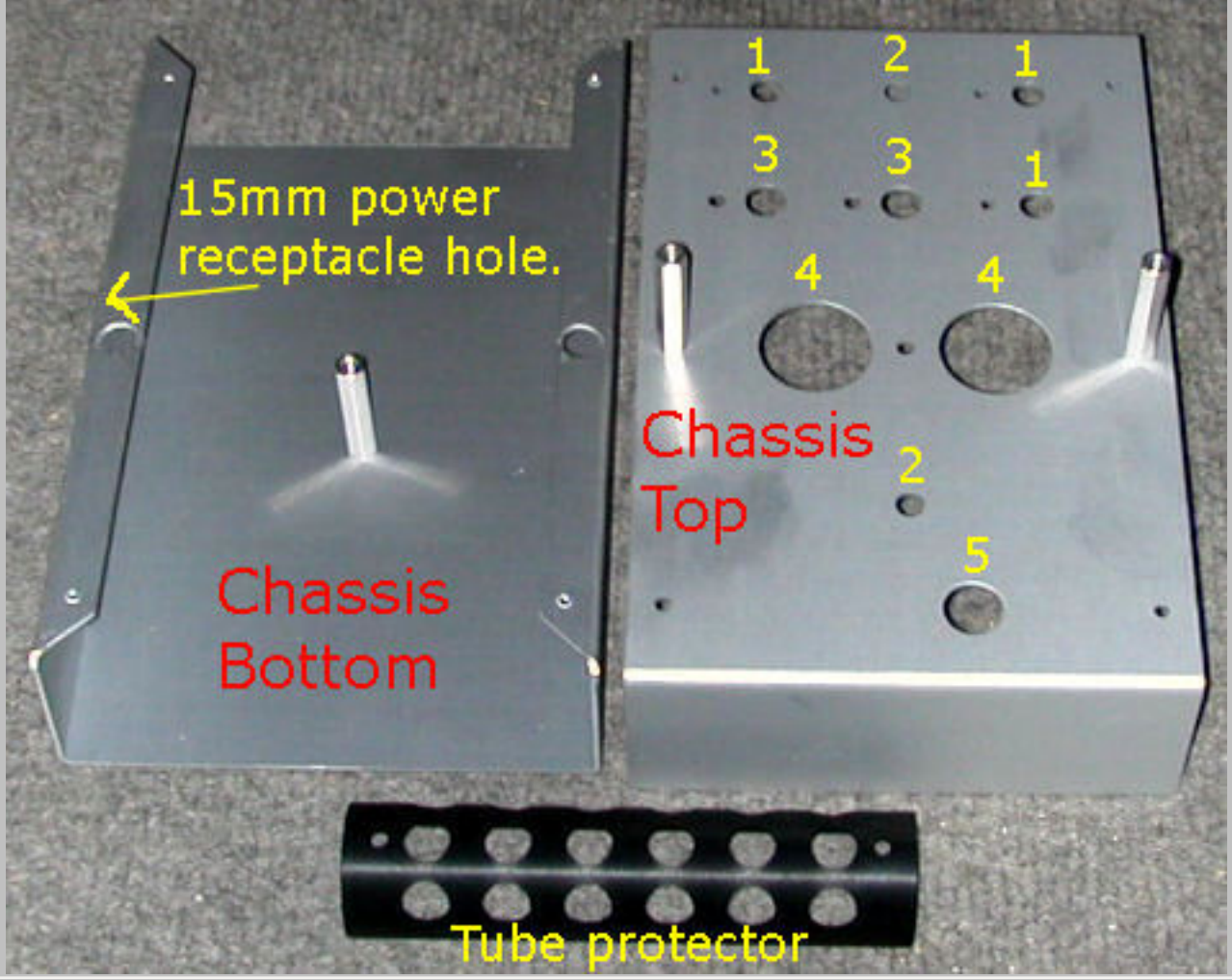


Hole sizes

1 = 5/16", 2 = 1/4", 3 = 3/8", 4 = 1", 5 = 1/2"

There is also a 15mm power receptacle hole on the left side that is not visible in the photo. This would be for a female wall wart plug receptacle.

The small holes next to 1 and 3 is where the anti rotation tabs on Alpha pots go.


| Click here to enter my tube amp parts catalog | | | |
|---|---|---|---|
| Home | Order Information | Board kit manufactures | Amp Forum |
| E-mail Me | Shipping Info/policy | Service Technicians | - |
| Links | Returning parts | References | - |

The Library of information

Click the link above for Tube amp building info, Schematics, Board kit information, Transformer diagrams, Photo's, Sound clips.

# Hoffman Amplifiers

Back to Library page

Tube pedal project

Page 1 - Page 2 - Page 3 - Page 4

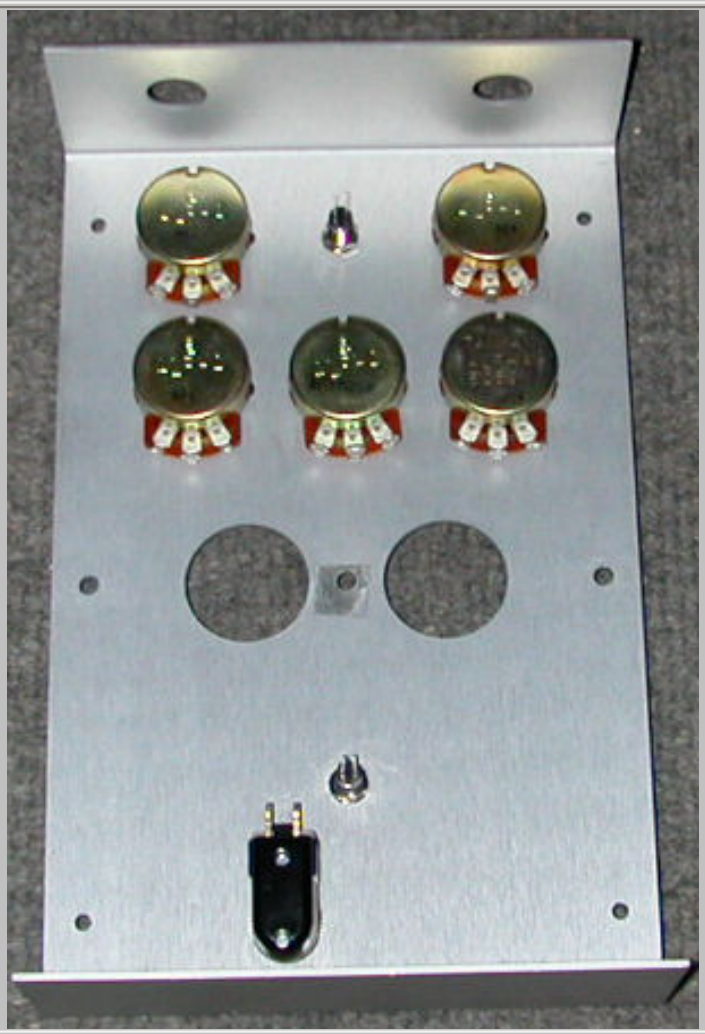

Here you can see that I loaded the holes with 5 - pots, 2 - LED's, 2 - 12ax7's and 1 - SPST foot switch.

Box with tubes, pot, knobs, jacks, LED's and Footswitch.


| Click here to enter my tube amp parts catalog | | | |
|---|---|---|---|
| Home | Order Information | Board kit manufactures | Amp Forum |
| E-mail Me | Shipping Info/policy | Service Technicians | - |
| Links | Returning parts | References | - |
| The Library of information<br>Click the link above for Tube amp building info, Schematics, Board kit information, Transformer diagrams, Photo's, Sound clips. | | | |

# Hoffman Amplifiers

Back to Library page

Tube pedal project

Page 1 - Page 2 - Page 3 - Page 4

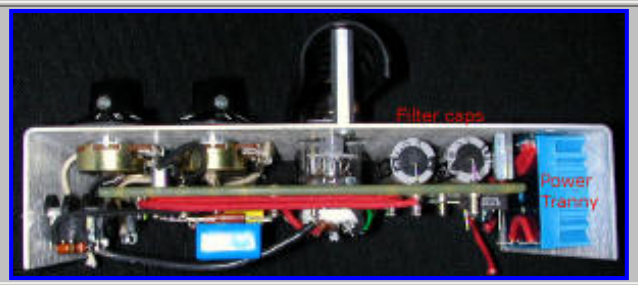


Side view - click for larger image

Top View - Click for larger image

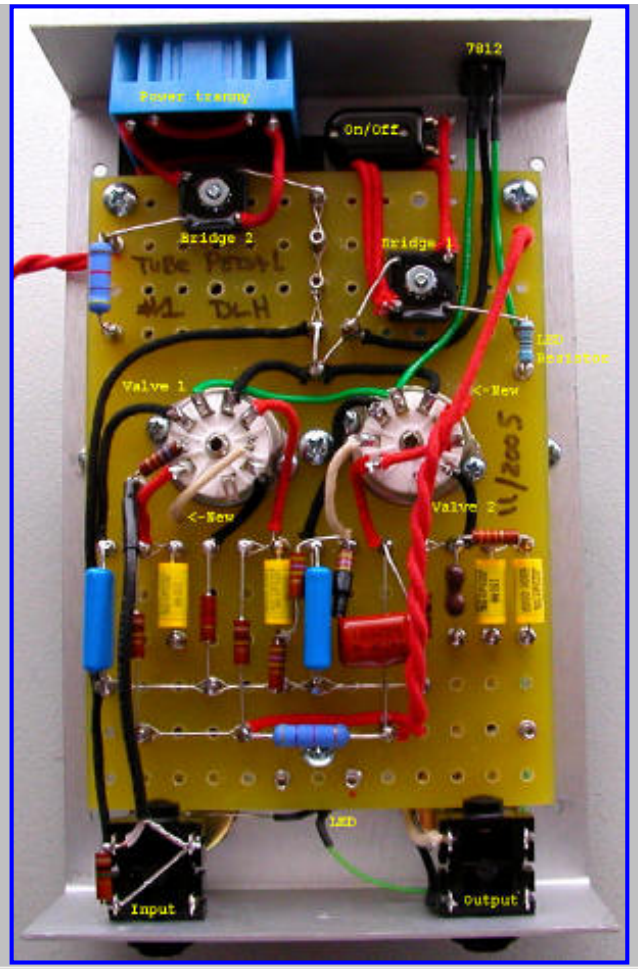


Back View - Click for larger image.

**Note:** I did a bunch of updates to the original pedal #1 on 11/12/2005. The changes are noted below.

**Left:** I updated this board by adding grounds from the Tube mounting screws to the main ground buss. I used #6 ring terminals and ran two wires to the ground lug. See **<-Socket grounds**.
I also updated a couple wire runs that are not shown in this photo. The wire from the center of the volume pot pops up through the board right next to the tube socket and goes to pin 7. The filter cap wire that goes to pin 6 on valve 2 pops up through the board right next to the tube socket. Both of these new wire runs can be seen in the photo on the right, they are noted as **<-New**

**Right:** The relay was eliminated and the hot switch mod is wired full time now. The noise level was reduced a bunch by doing this.
The 7812 voltage regulator was moved and bolted to the chassis for a heat sink. See **7812**
Ground wires were shuffled around and some were removed or condensed. The chassis is tied to the main ground buss through the volume pot. The volume pot body has a jumper wire soldered to the back of the pot that is connected to the black pot ground buss wire.

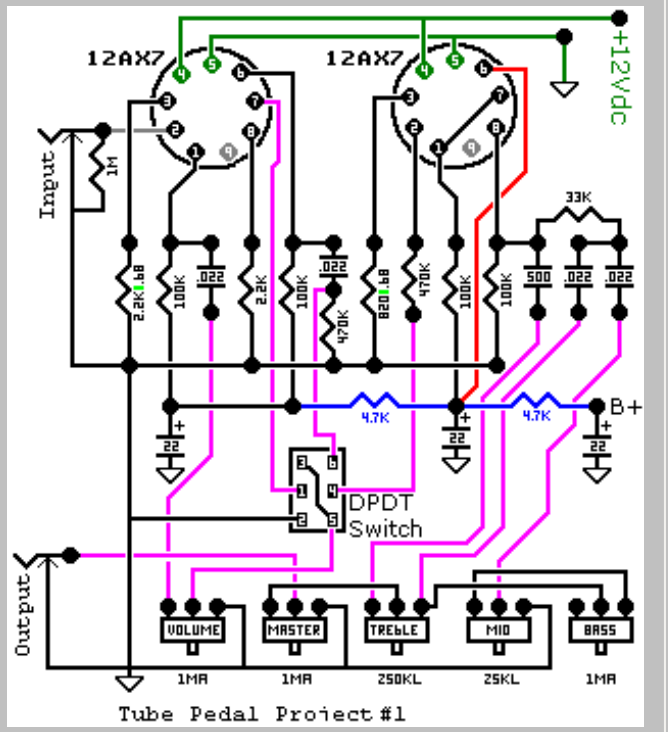


This is the original circuit that I installed in my Tube pedal #1. See the next page for an updated circuit drawing.

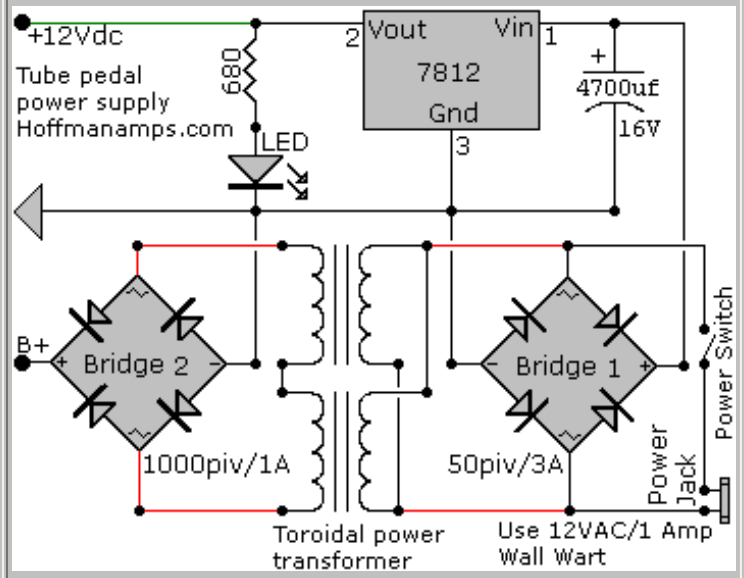


Pedal power supply schematic

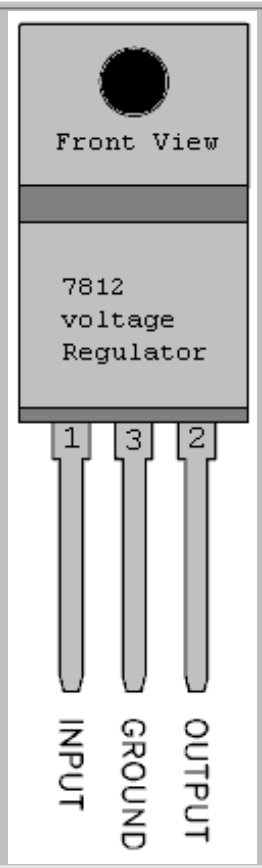


7812 voltage regulator

This toroidal power transformer is very small and is used with tube pedals. It steps up 12Vac up to about 240Vac. It has twin primaries and secondaries. You run the primary in parallel and the secondary in series. You use a 12 VAC/1 amp wall wart to power it. It's perfect for the project box above. It has PC board solder tabs and there is a small threaded mounting hole in the center on the back side so you cab bolt it down.

I have the transformer wiring diagram listed on my library page.

# Hoffman Amplifiers

Back to Library page

Tube pedal project

Page 1 - Page 2 - Page 3 - Page 4

## Project Notes

Stay tuned, more notes to follow as I think of them.
Here's the updated layout diagram for tube pedal pedal #2.

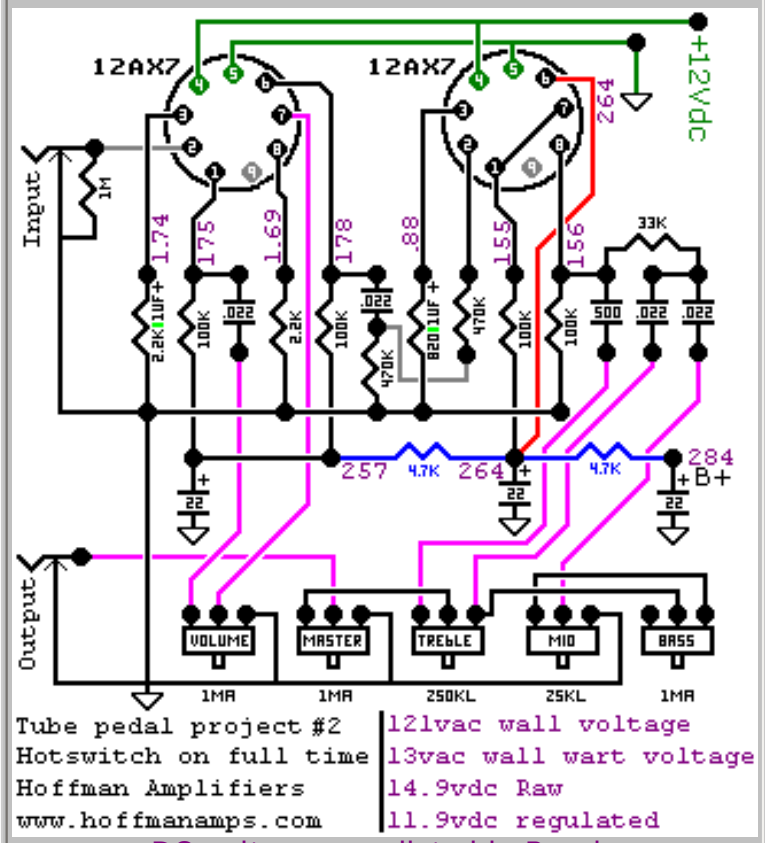


DC voltages are listed in Purple

**#1 tip:** Space is very tight. You must plan everything very, very, very carefully.

I ended up removing the relay from my project. **Reasons:** Space is really tight inside this chassis. Relay coils too close to input jacks produce more hum. Longer signal wires leading to and from the relay add hum. The pedal is now dead quiet without the relay. I don't turn off the hot switch mod anyway. I would think twice about using the foot switch to switch any signals. I would use the switch as power on and off and keep the signals all at the other end of the chassis.
Keep your power transformer, bridges, voltage regulators far away from your signal. Note how I have all the power supply stuff on one side and the circuit parts on the other side of the tubes.
Mount the 7812 voltage regulator on the chassis next to the power transformer so that the chassis acts as a heat sink. The voltage regulator gets very hot.
Cut your circuit board 3 3/4" wide so that it fits between the bent over edges of the back cover.
I used 5/8" hex standoffs because the Illinois 22/500v caps are 5/8" tall. Taller or larger filter caps would not fit under the board. 5/8" standoffs work perfect for tube height.
I changed the cathode bypass caps from .68's to 1uf's because the .68's would not fit under the lid.
I blocked off the LED hole by the footswitch on my pedals because they are right where my filter caps are.

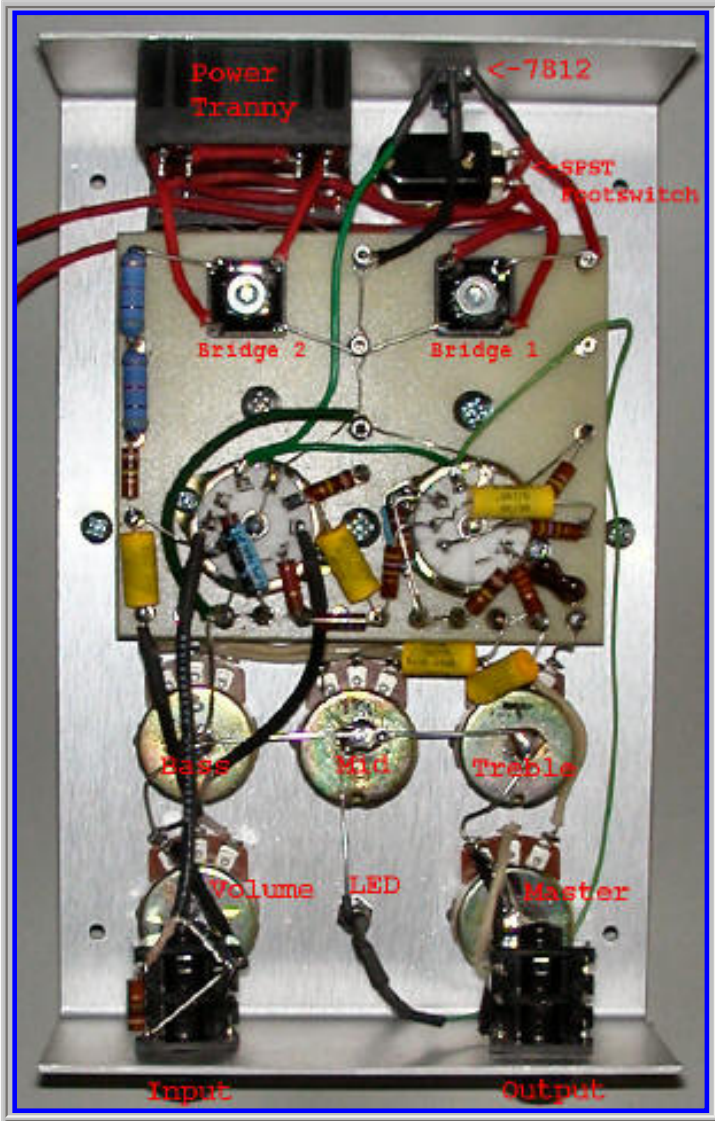


Click on the image for a large high resolution image.

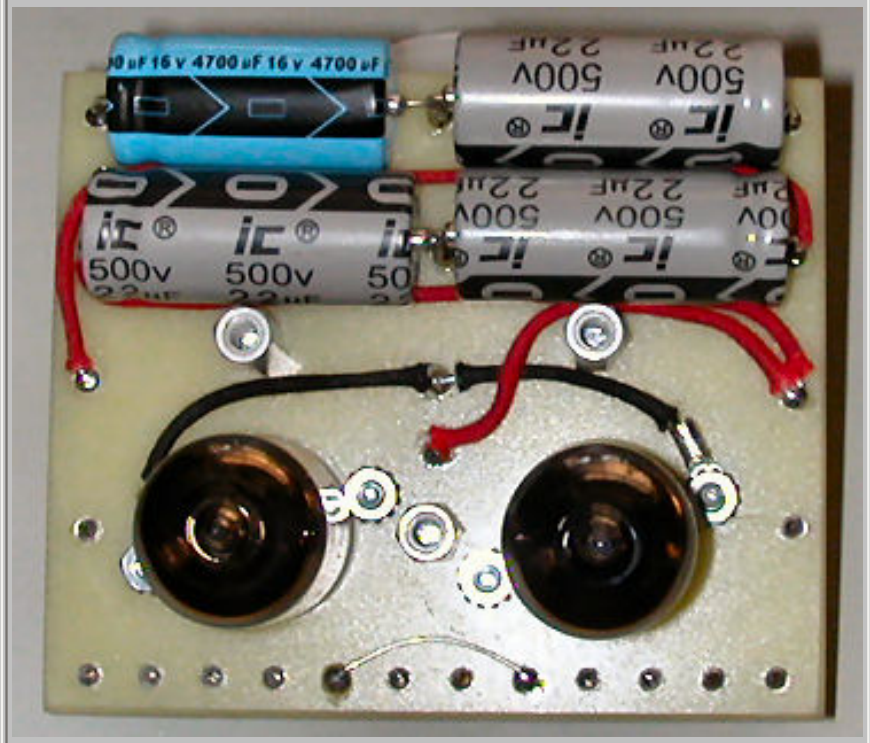


Back side of the board.

This is tube pedal #2 using the circuit listed above. Note that the circuit board is way smaller than tube pedal #1 and the components are wired point to point to save space. On the back of the board is where the filter caps are. 3-22uf/500v filter caps and a 4700uf/16v for the 12volt supply.

Go to this page to hear sound clips of this project. Library Page.


Click here to enter my tube amp parts catalog

| | | | |
|---|---|---|---|
| Home | Order Information | Board kit manufactures | Amp Forum |
| E-mail Me | Shipping Info/policy | Service Technicians | - |
| Links | Returning parts | References | - |

The Library of information

Click the link above for Tube amp building info, Schematics, Board kit information, Transformer diagrams, Photo's, Sound clips.